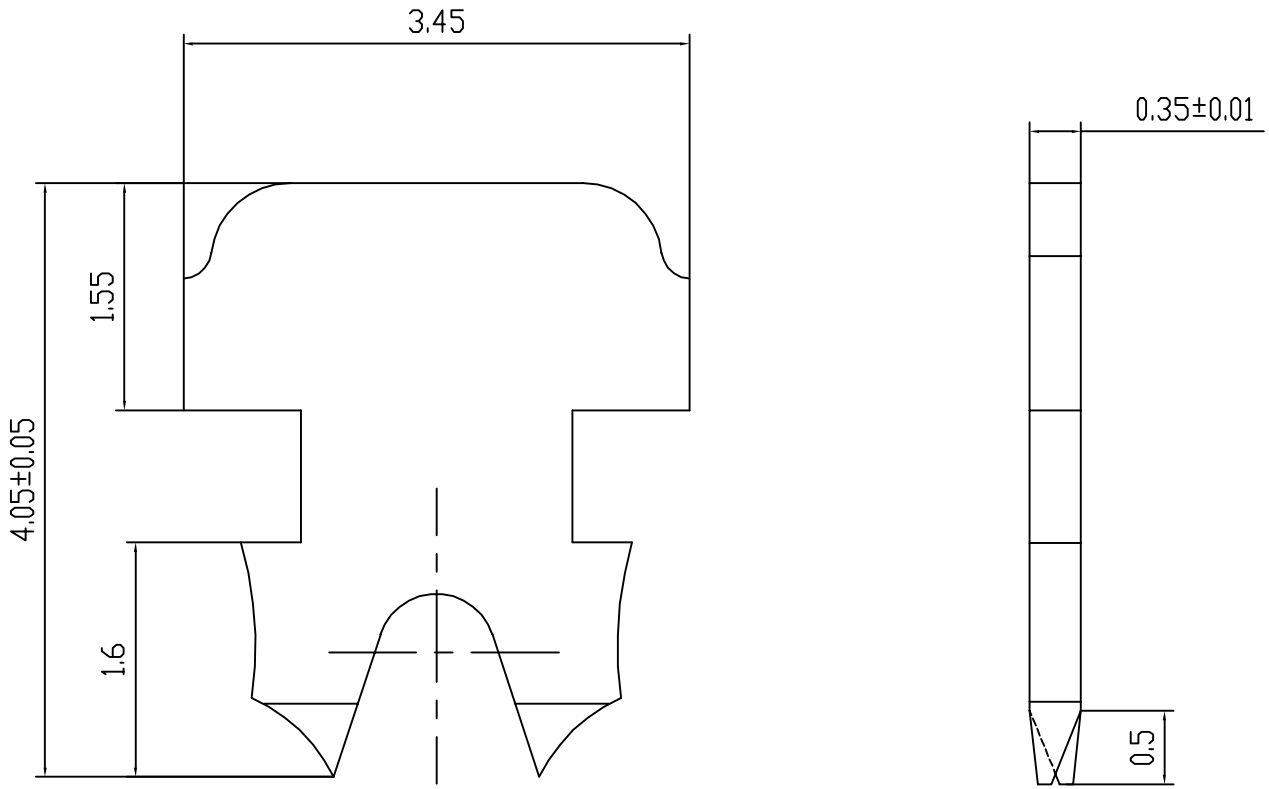

RoHS Compliant

CZT® 温州意华接插件股份有限公司 WENZHOU YIHUA CONNECTOR CO.,LTD					TOLERANCES 0~15 ±0.15 15~30 ±0.2 30~ ±0.25 ANGLES: ±1°	Material:	铜合金 T=0.35mm	Designed:	何信浩	NAME:	普通金片
	A4 SIZE	SCALE 1:1	UNIT mm	CUSTOMER:		Finish:	Au 50u"	Checked:		DWG NO:	QWY-1029-1 REV.
				MODEL NO:		SHEET 1 OF 1		Approved:		PART NO:	22201G00055